NOTES:
1. OVERALL HEIGHT IS IN LOADED CONDITION. UNLOADED HEIGHTS MAY BE 4" ABOVE HEIGHTS SHOWN.
2. DO NOT SCALE DRAWING.
3. ALL DIMENSIONS ARE APPROXIMATE AND SUBJECT TO ENGINEERING CHANGES.
4. DRAWING MAY OR MAY NOT SHOW ALL ITEMS AS DESCRIBED IN THE WRITTEN DETAIL SPECIFICATIONS.
5. INCLUSION OF AN ITEM ON THE DRAWING DOES NOT CONSTITUTE INCLUSION OF THAT ITEM WITH THE FINAL DELIVERED UNIT.
6. THE EFFECTIVE DOOR OPENINGS WILL BE APPROX. 2" LESS THAN THE NOTED COMPARTMENT OPENING FOR ROLL UP DOORS AND UP TO APPROX. 4" LESS FOR HINGED DOORS

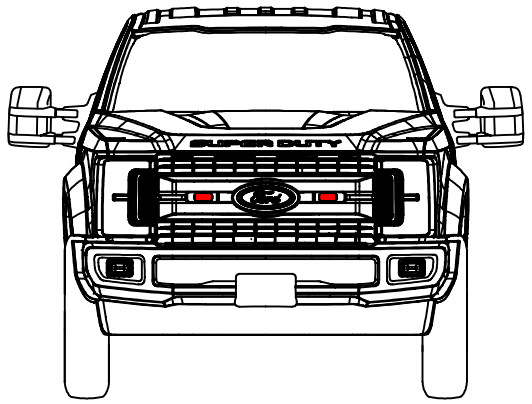


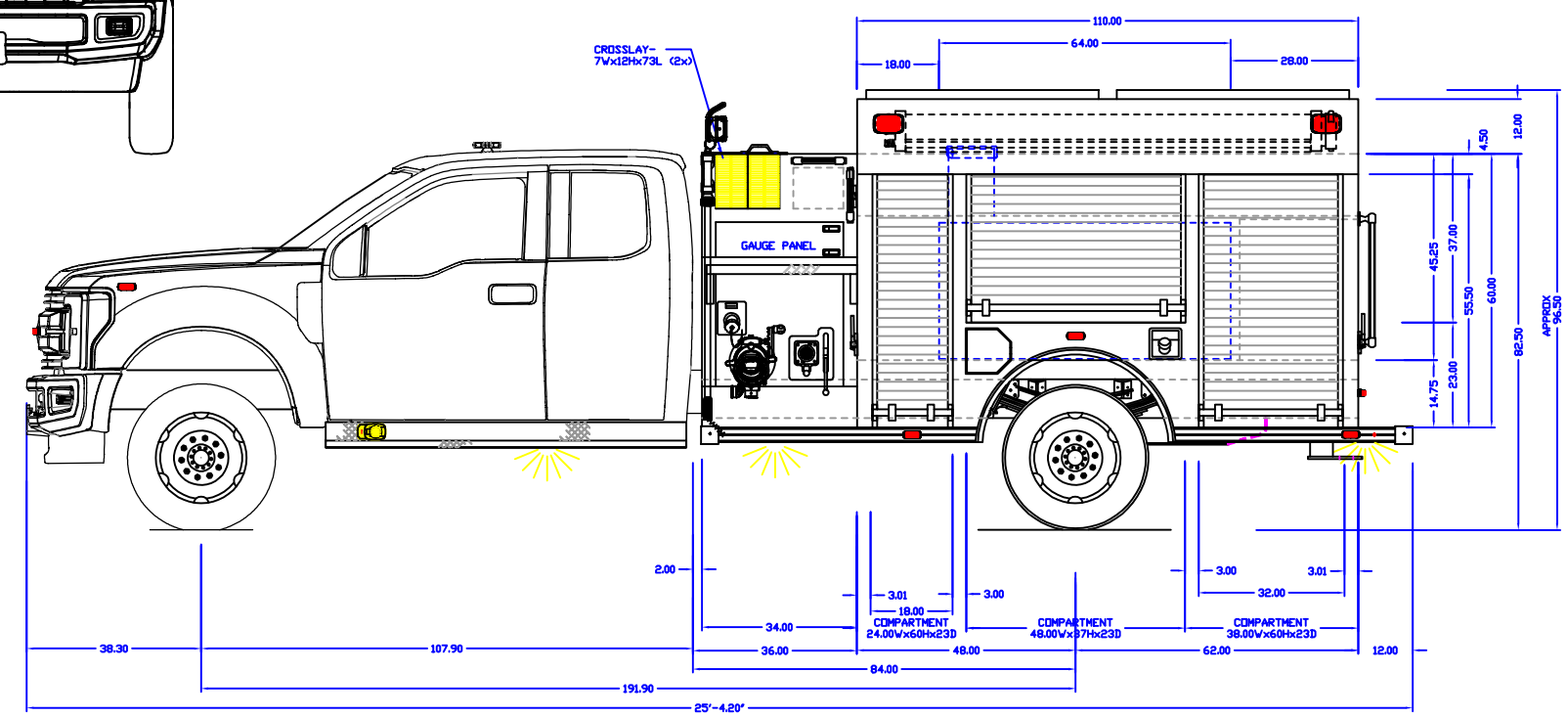


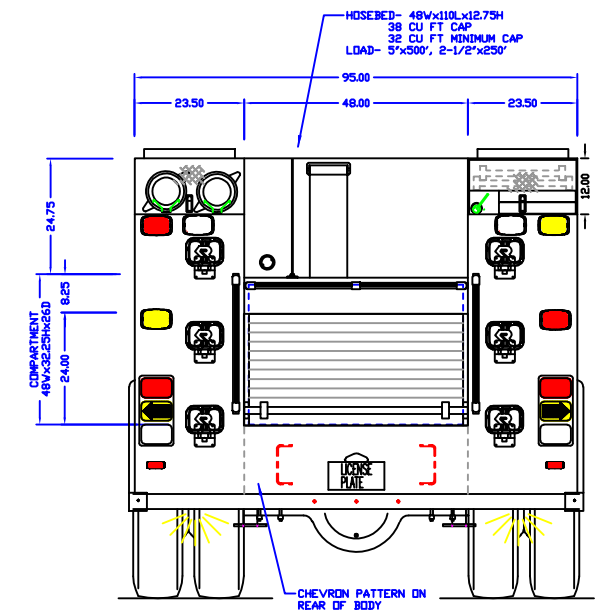


INTIALS: HF
JOB NUMBER: 3988
DATE: 8/17/2021

MAIN FILE: -
DEPT: -
DEALER: -

PRODUCTION APPROVED

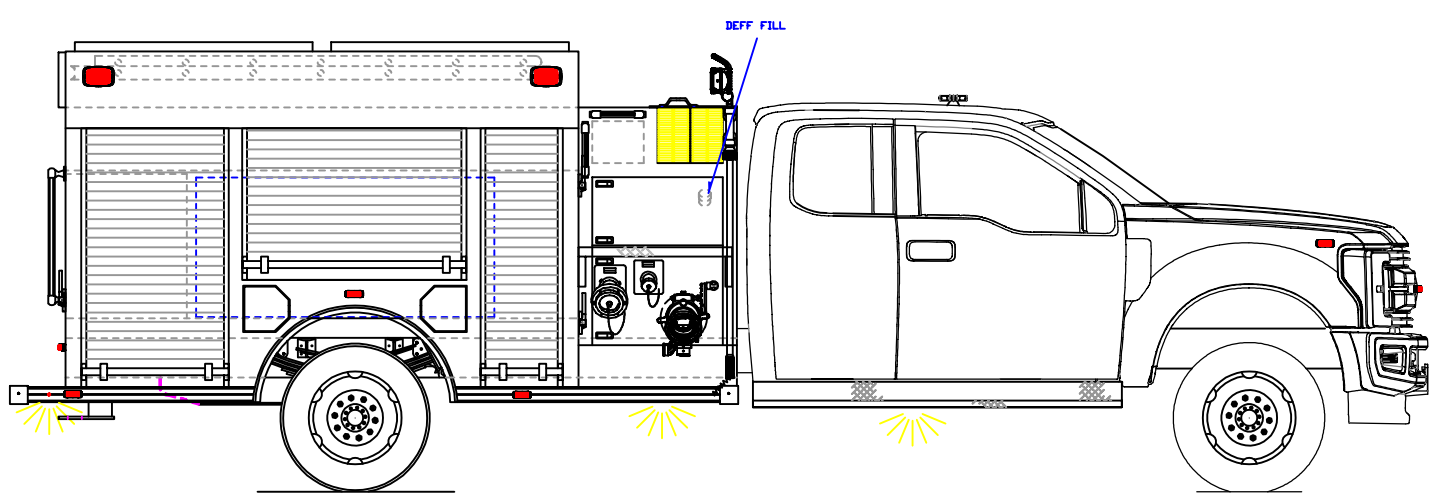


| | |
|---|---|
| *APPROVED BY:* | |
| CHASSIS: FORD | |
| PUMP: HALE 1250 GPM | |
| TANK: POLY/300 | |
| PANEL MATL: STAINLESS STEEL | |
| COMP INTERIOR: SWIRL FINISH | |
| MAXIMUM HEIGHT | NONE |
| MAXIMUM LENGTH | NONE |
| BODY WIDTH | 95" |

| | |
|---|---|
| REVISED: MJ | DATE: 3/4/21 |
| DRAWN: BVZ | DATE: 6/20/19 |

PROPRIETARY AND CONFIDENTIAL
THE INFORMATION CONTAINED IN THIS DRAWING IS THE SOLE PROPERTY OF ROSENBAUER. ANY REPRODUCTION IN PART OR AS A WHOLE WITHOUT THE WRITTEN PERMISSION OF ROSENBAUER IS PROHIBITED.

# BROOKSVILLE, FL

rosenbauer

*ROSENBAUER MINI 3/16"*

DRAWING NUMBER: BROOKSVILLE, FL

REV: -